BISON GEAR

Awning Mount Quick Release Installation guide

AW-MNT-02-SMALL; AW-MNT-02-LARGE

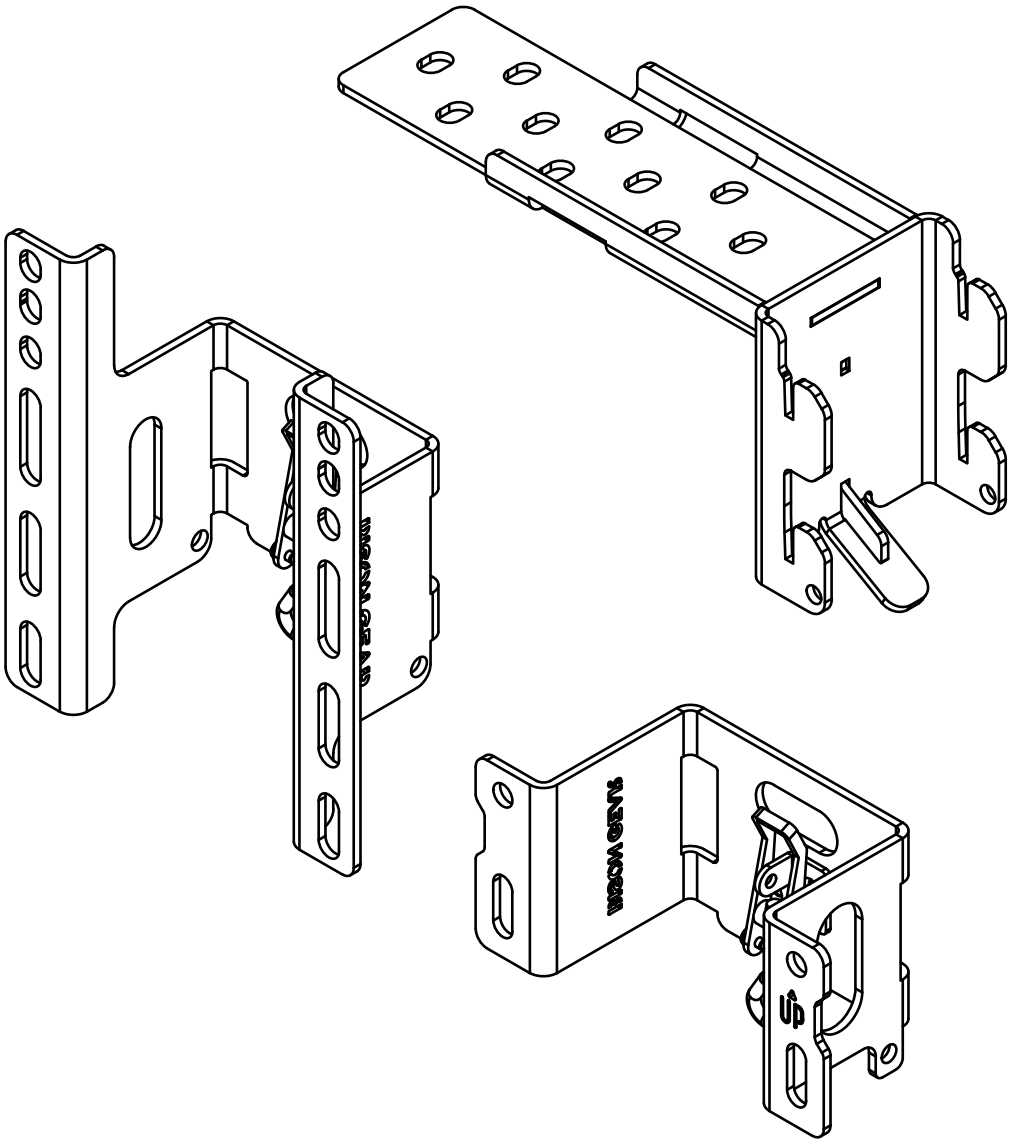

BISON GEAR

Before you start

Before installation:

- Familiarize yourself with these instructions.
- Ensure that all listed parts and hardware are included in the package.
- Gather the required tool.

Part list : **AW-MNT-02-SMALL**

No.	PART	QTY	IMAGE	☒
1	Awning hook	**2**	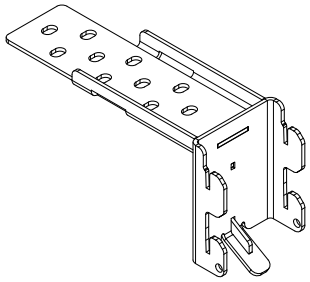	
2	Awning bracket SMALL	**2**	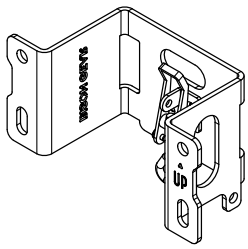	
3	Flange nut M8 DIN 6923	**4**	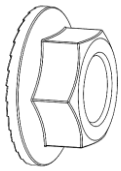	
4	T-slot M8x20 bolt ISO 7380-2	**4**	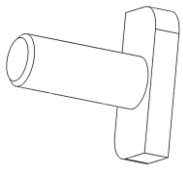	

BISON GEAR

Part list : **AW-MNT-02-LARGE**

No.	PART	QTY	IMAGE	☒
1	Awning hook	**2**	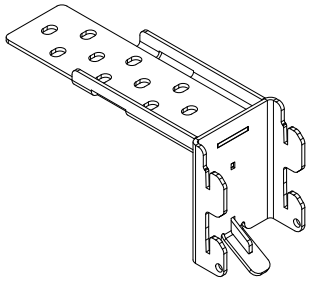	
2	Awning bracket LARGE	**2**	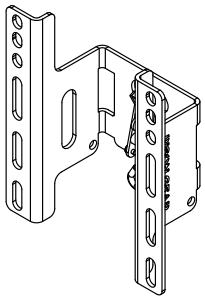	
3	Flange nut M8 DIN 6923	**4**		
4	T-slot M8x20 bolt ISO 7380-2	**4**	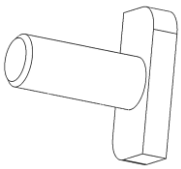	

List of necessary tools[1]:

- **13 mm wrench**

Torque settings:

During assembly, use the recommended tightening torques for screw, unless other parameters are specified for a given connection.

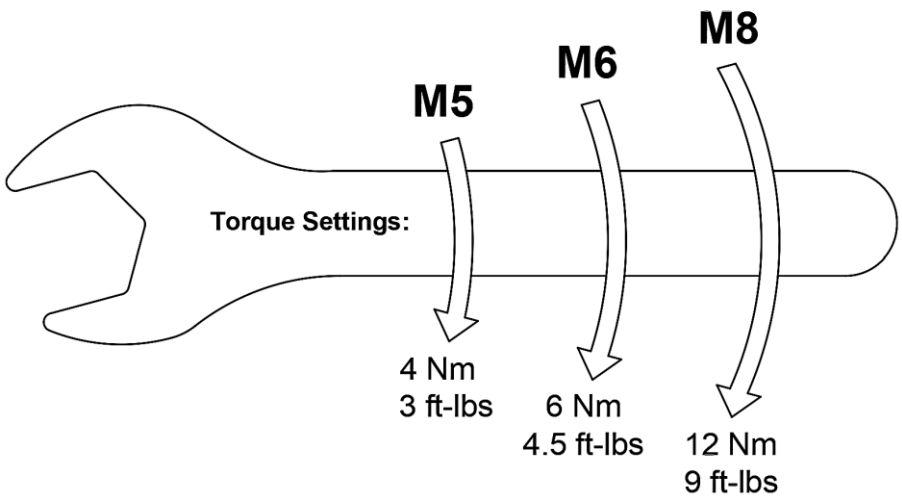

[1] NOTE: The tools **are not** the part of the set.

Installation:

The **Bison Gear Quick Release Awning Brackets** ensure a swift and straightforward setup process. The innovative quick-release mechanism allows for effortless detachment and reattachment of awnings, giving you the freedom to adjust your outdoor space at your convenience.

The installation procedure is the same for all of three models.

The installation kit does not include fasteners for attaching the brackets to the awning because most awnings use individual mounting systems and dedicated bolts. Please use the bolts provided in your awning installation kit.

Follow the steps below to install product correctly:

1. Start by preparing the product parts and gathering the necessary tools.

2. Check the awning length.

3. The brackets should be as wide as possible. Choose the appropriate crossbars on your roof rack that allow proper awning installation.

4. Pre-screw the awning hook to the selected crossbar – the picture below. Use at least two M8 bolts for each bracket. Before fully tightening the bolts, place the awning bracket on the hook and check it does not collide with the vehicle body and it is possible to close the latch. If it necessary, adjust the hook bracket position.

   Ensure that the hook bracket extend from the roof rack on the same length.

   If everything is fine **–** tighten the bolts. Tightening torque – 20-25 Nm; 15-18 ft-lbs.

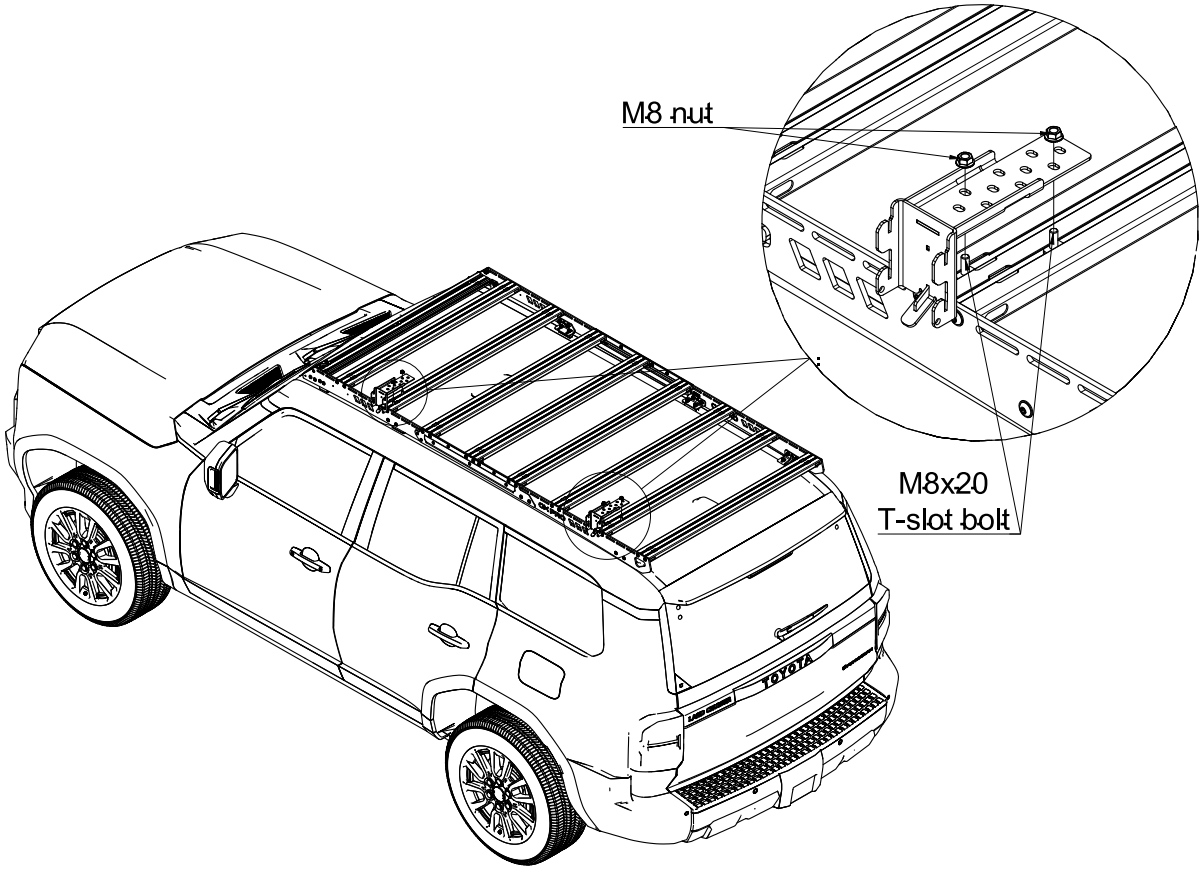

5. Pre-screw the bracket to the awning. Check the dimension (DIM) between the hook bracket and make the same for the bracket on the awning. The distance (X) between the brackets and the ends of the awning should be the same of the both of ends.

   The installation kit does not include fasteners for attaching the brackets to the awning because most awnings use individual mounting systems and dedicated bolts. Please use the bolts provided in your awning installation kit.
   You can also adjust it directly on the car. Place the awning with the bracket on the hooks which were previously screwed into the roof rack. If necessary, slide the bracket to achieve the correct position and tighten the bolts.

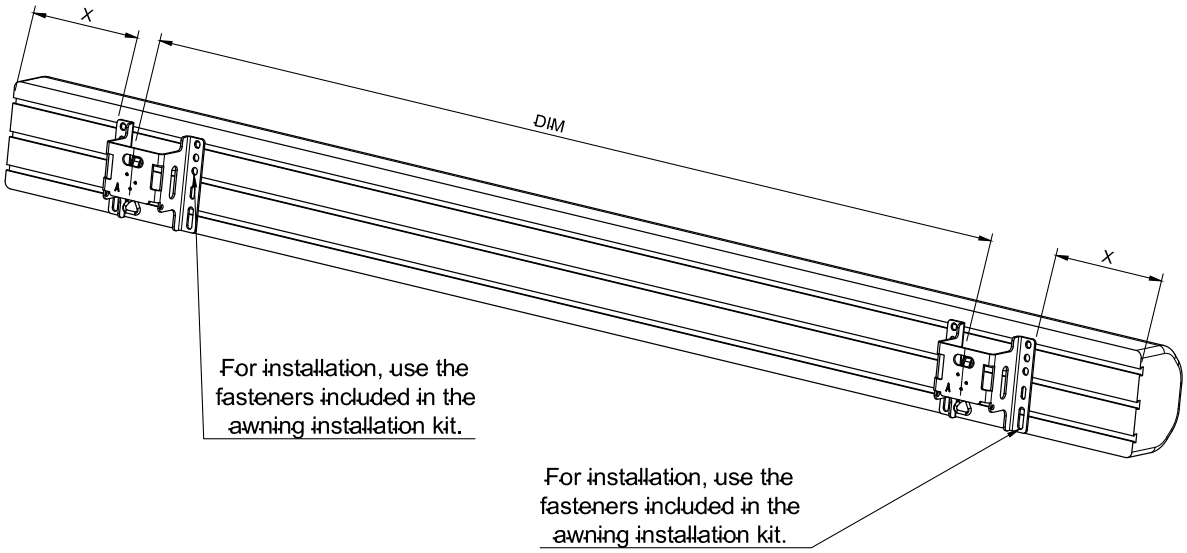

6. Close the latches to secure the awning. If necessary, adjust the hook part of the latch (if it is too tight, slightly unscrew the hook; if it is too loose, tighten the hook by screwing it in).

   You can also secure the latch with a padlock. Insert the padlock through the hole in the latch and lock it. This will prevent the latch from being opened.

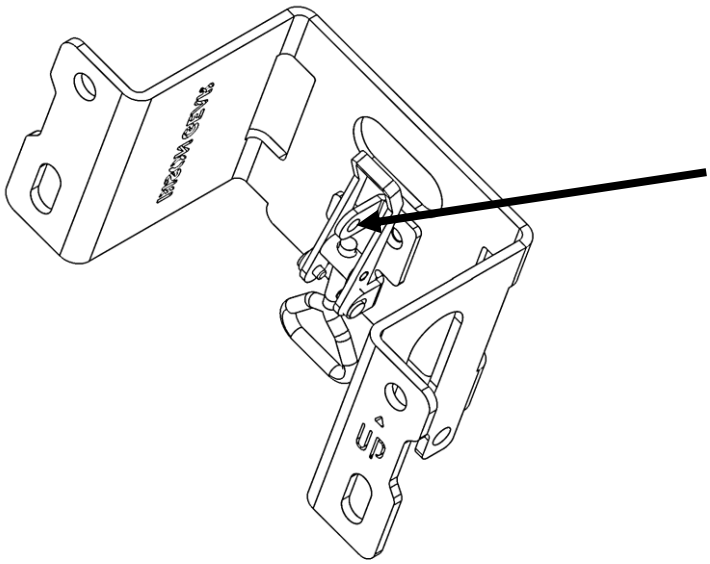

The video below shows the placing/ removing the awning from the car:

Make sure that everything is mounted properly, and all the bolts are tightened. If everything is correct, your work is done.

After driving 50km, check all the bolts and retighten them if necessary.

Have a great time with Bison Gear products!

Email: contact@bison-gear.com

Phone: **+48 505 642 981**