BISON GEAR

Milwaukee Packout system mounting bracket

Installation guide

MLK-MNT-S

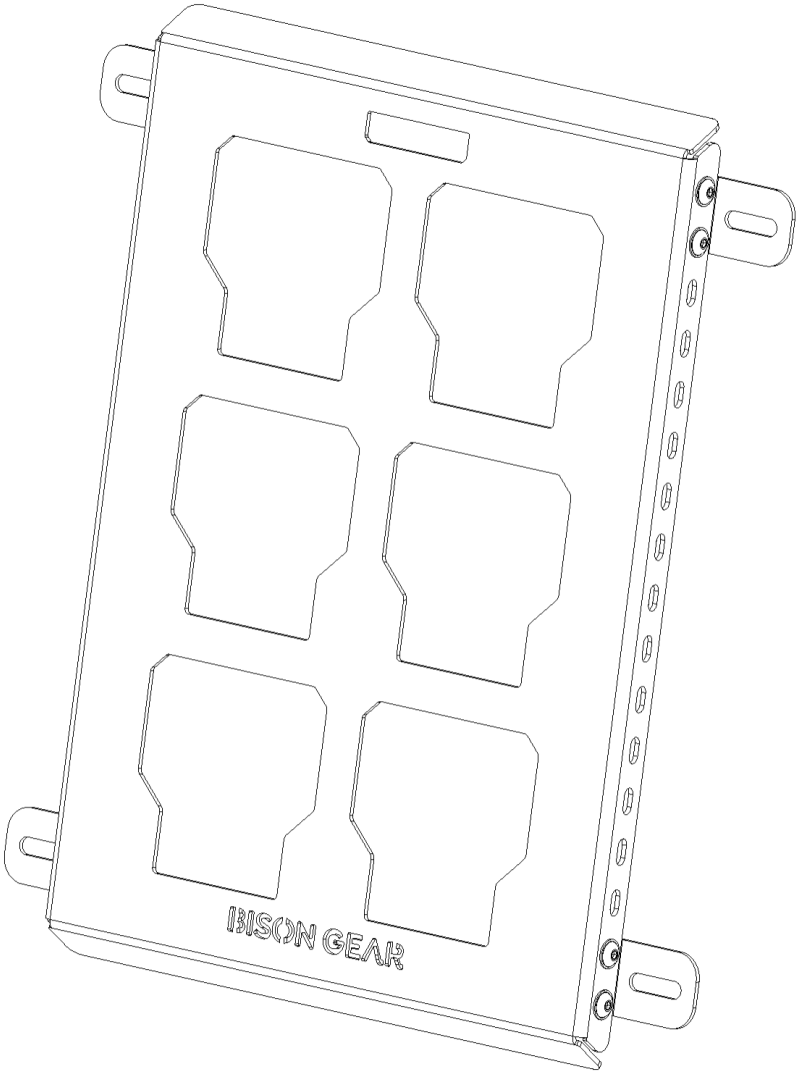

BISON GEAR

Before you start

Before installation:

- Familiarize yourself with these instructions.
- Ensure that all listed parts and hardware are included in the package.
- Gather the required tool.

Part list

LP	PART	QTY	IMAGE
1	Mounting panel	**1**	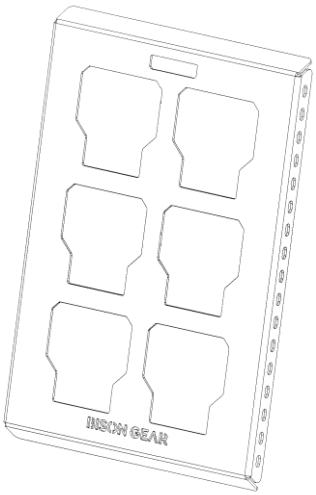
2	L-bracket	**4**	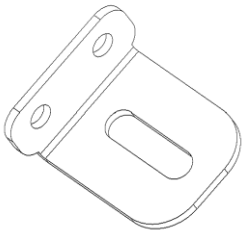
3	Flange nut M5 DIN 6923	**8**	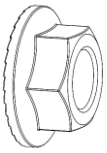

4	Flange nut M6 DIN 6923	**4**	
5	Flange bolt M5x12 ISO 7380-2	**8**	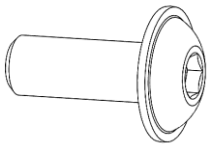
6	Flange bolt M6x12 ISO 7380-2	**4**	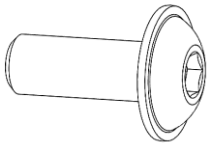

List of necessary tools[1]:

- **3 mm Allen Key (Hex)**
- **4 mm Allen Key (Hex)**
- **8 mm wrench**
- **10 mm wrench**

Torque settings:

During assembly, use the recommended tightening torques for screw, unless other parameters are specified for a given connection.

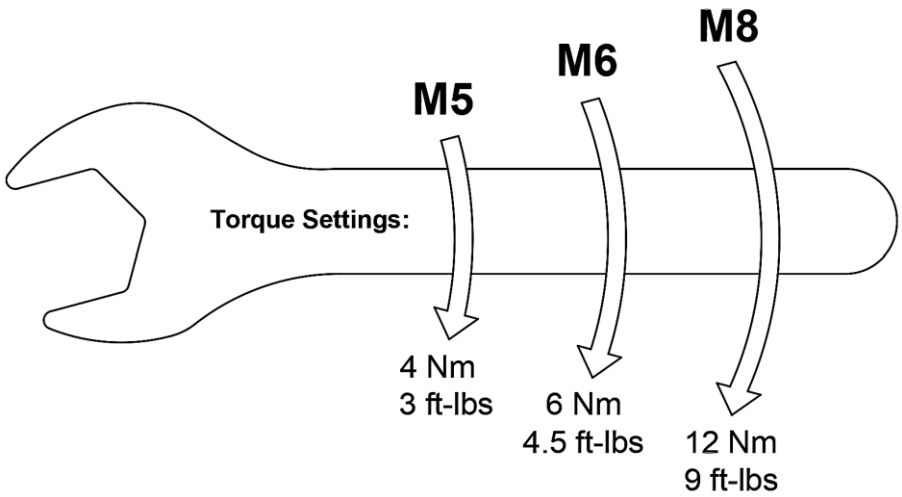

[1] NOTE: The tools **are not** the part of the set.

Installation:

The mounting platform can be assembled in two ways - using the bracket outside or the inside. Choose the option that best suits your configuration. The instruction below describes both method and installation to the roof shelf.

Follow the steps below to install product correctly:

1. Start by preparing the product parts and gathering the necessary tools.

2. Assemble together mounting panel and side L-brackets together using M5x12 flange bolt and M5 nuts. Diagrams below shows two configurations – choose the best option for you.

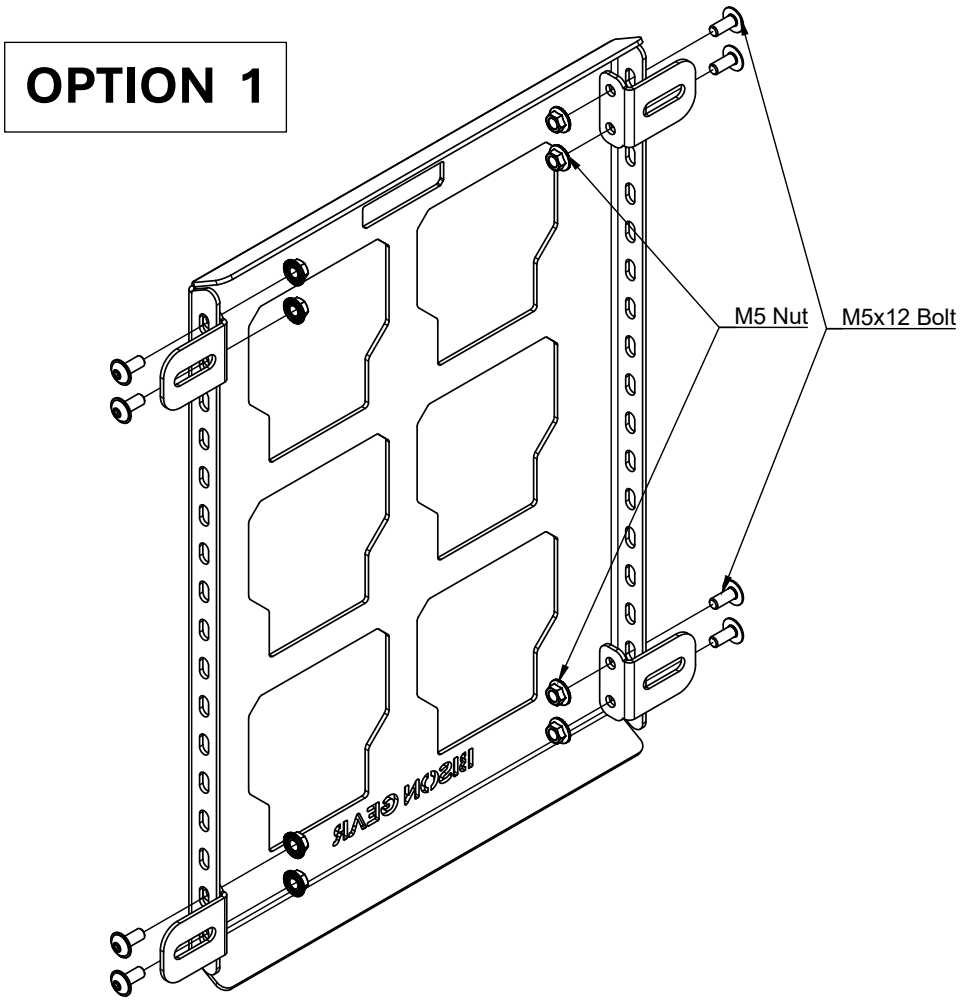

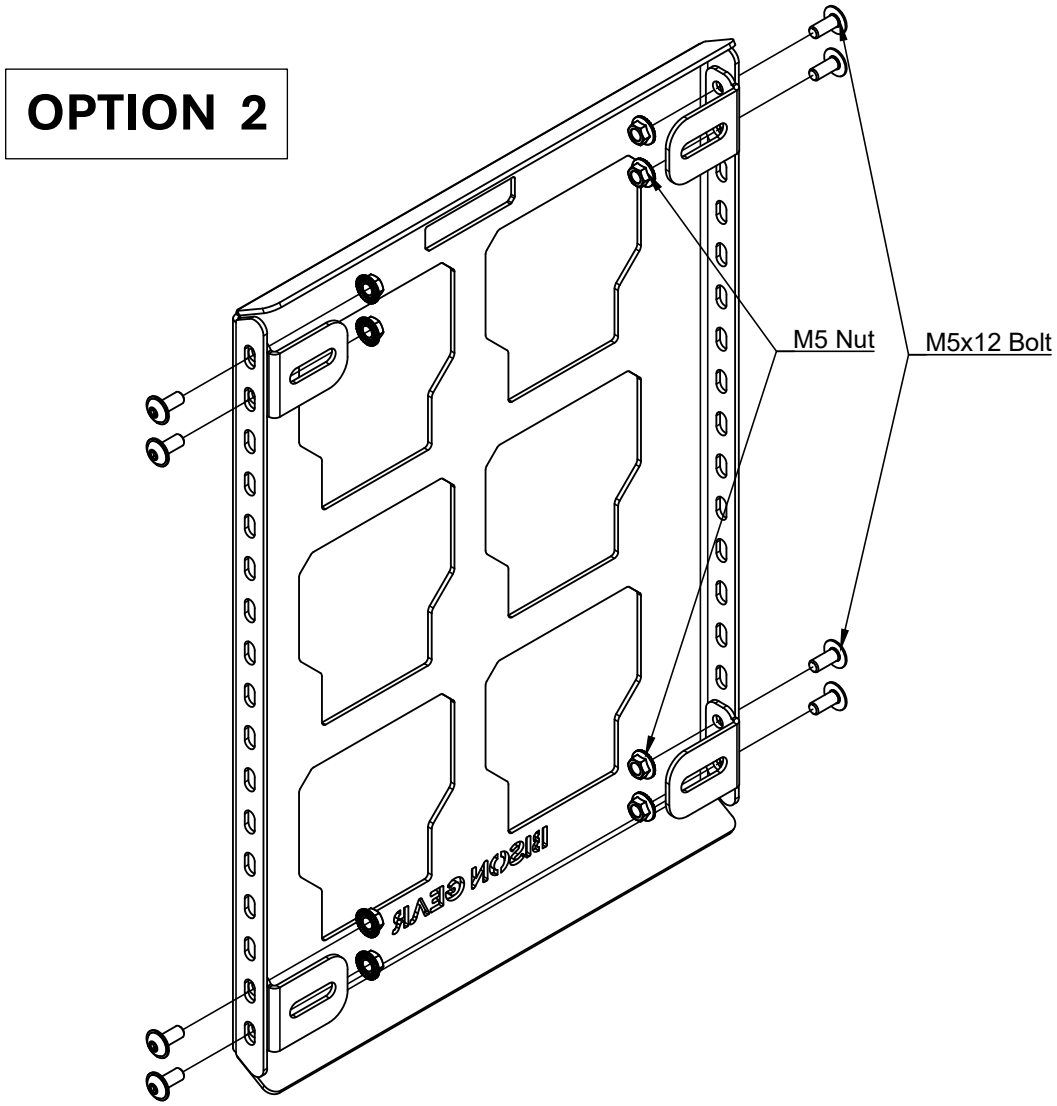

Before mounting the L-brackets, choose the most suitable position. The brackets can be installed along the long side of the platform.

3. Screw the mounting platform to the roof shelf using M6x12 flange bolt and M6 nuts - according to the diagram below.

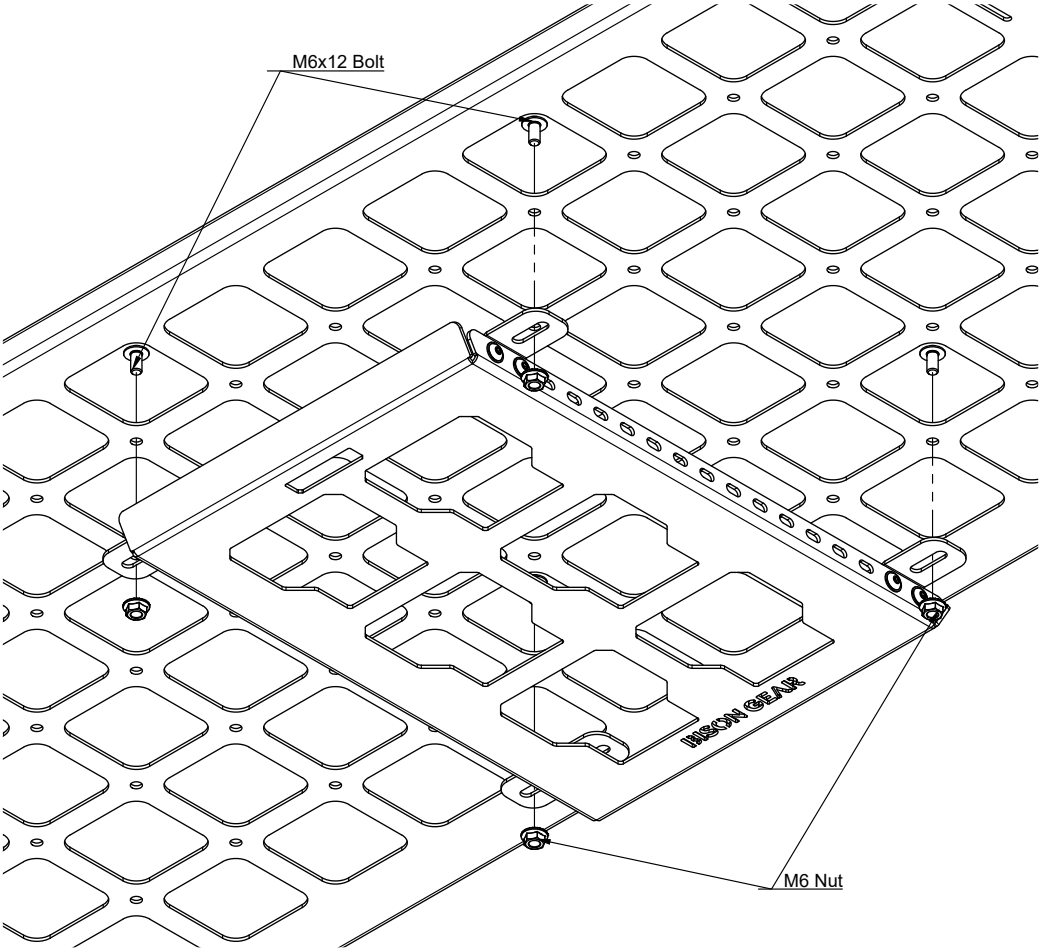

4. Tighten all the bolts.

Make sure that everything is mounted properly, and all the bolts are tightened. If everything is correct, your work is done.

After driving 50km, check all the bolts and retighten them if necessary.

Have a great time with Bison Gear products!

Email: contact@bison-gear.com

Phone: **+48 505 642 981**