BISON GEAR

Toyota 4runner 5G Roof Rack OX PRO Installation Guide

RR-4R5G-OX

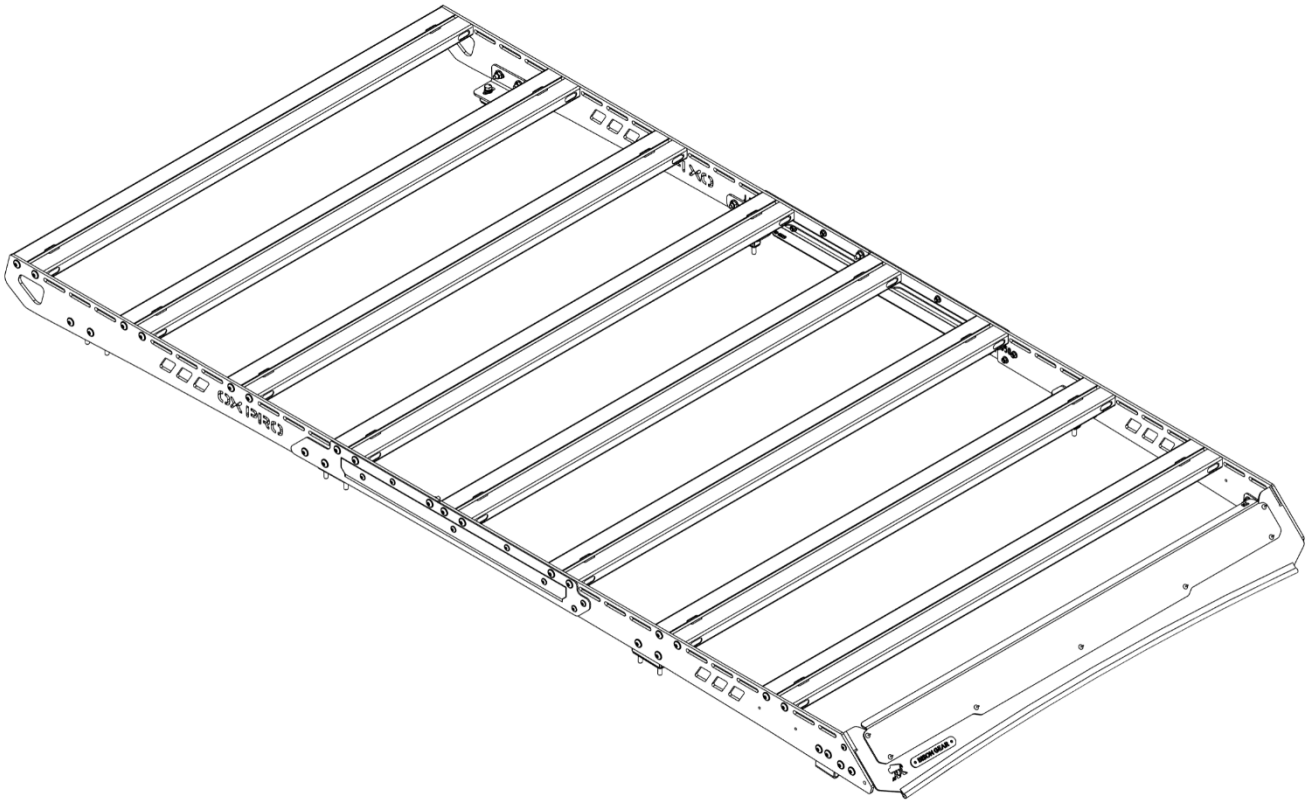

V.16.07.2026 (PK)

BISON GEAR

Before you start

The Roof Rack is a 2-in-1 model – it can be used either as a standard front wind deflector or with an LED bar cutout, allowing installation of a 42” LED Bar lamp. The base version comes with the LED cutout, which can be easily converted to the standard version by attaching a specially designed cover. This converts the roof rack into the standard version.

Before installation:

- Familiarize yourself with these instructions.
- Ensure that all listed parts and hardware are included in the package.
- Prepare a flat surface or floor with a minimum area of 3 x 2.5 meters.
- Gather the required tools.
- Installation requires two adults.

Part list

No.	PART	QTY	IMAGE	☒
1	Profile 90x25 L=1180	**8**	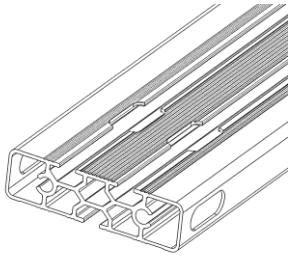	
2	Profile 60x30 L=1180	**1**	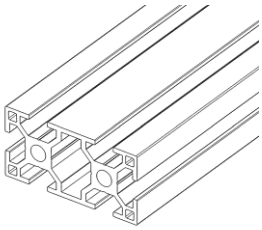	

3	Front rail	**2**	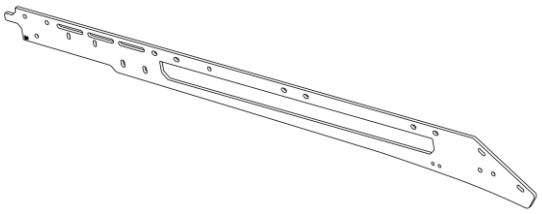	
4	Back rail L	**1**	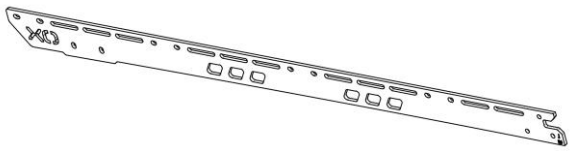	
5	Back rail R	**1**	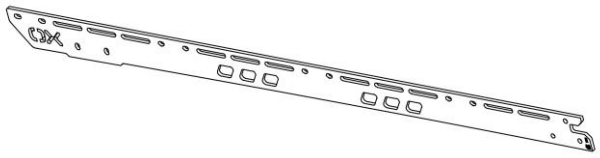	
6	Wind deflector	**1**	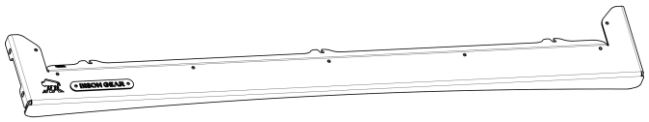	
7	Wind deflector cover	**1**		
8	Connector	**2**	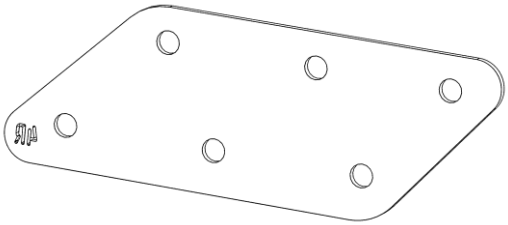	

9	Front roof bracket L	**1**	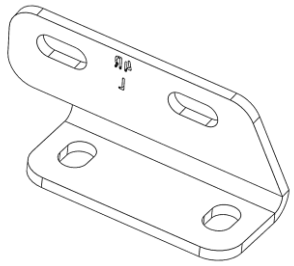	
10	Front roof bracket R	**1**	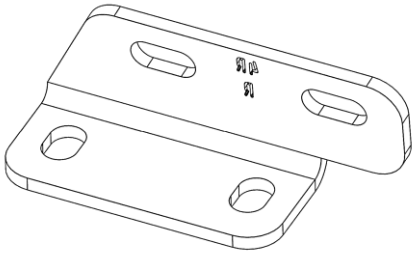	
11	Back roof bracket	**2**	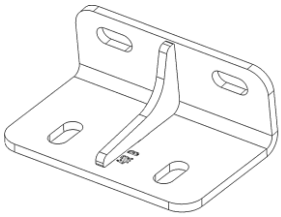	
12	Front support	**2**	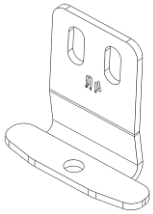	
13	Railing gap cover	**2**	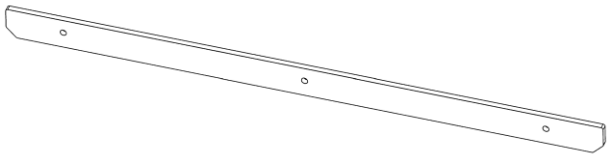	
14	Support bracket	**2**	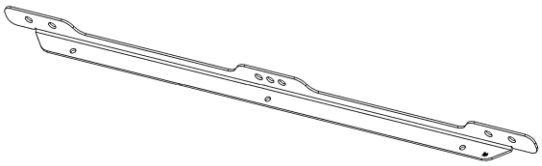	
15	Roof spacer H = 25	**4**	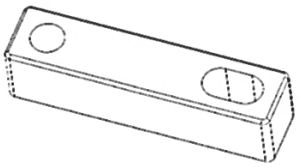	

16	Rubber pad	**4**		
17	M6 Flange nut DIN 6923	**14**		
18	M6 T-slot nut	**5**	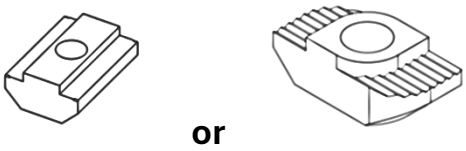 **or**	
19	M8 Flange nut DIN 6923	**22**		
20	M8 Flat washer DIN 125	**8**		
21	M8 Spring washer DIN 127	**8**	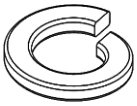	
22	M8x20 T-Slot bolt	**6**	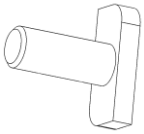	
23	M6x12 Flange hex bolt ISO 6921	**3**	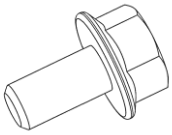	
24	M6x12 Flange bolt ISO 7380-2	**2**	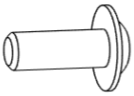	

25	M6x16 Flange bolt ISO 7380-2	**14**	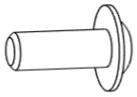	
26	M8x25 Flange bolt ISO 7380-2	**52**	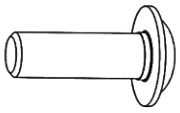	
27	M8x55 Hex bolt DIN 933	**8**	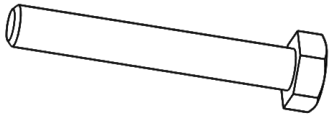	
28	Plastic clip	**10**	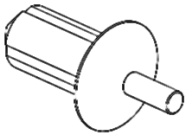	
29	Rubber wind deflector gasket	**1.2 m**	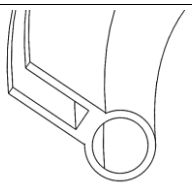	
30	Protective tape	**1.4 m**		

List of necessary tools[1]:

- **4 mm Allen Key (Hex)**
- **5 mm Allen Key (Hex)**
- **10 mm wrench**
- **13 mm wrench**
- **torque wrench**
- **cutters**
- **hammer**
- **wipe**
- ***(optional) torque wrench**

Torque settings:

During assembly, use the recommended tightening torques for screw, unless other parameters are specified for a given connection.

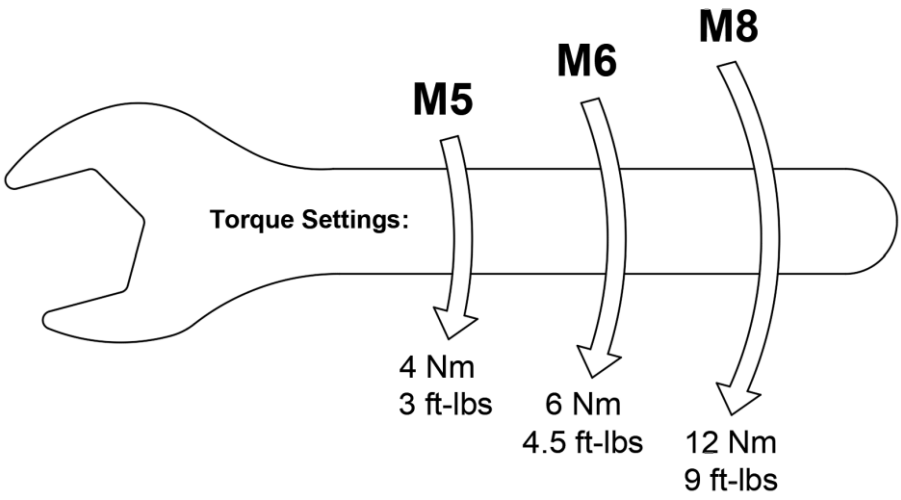

[1] NOTE: The tools **are not** the part of the set.

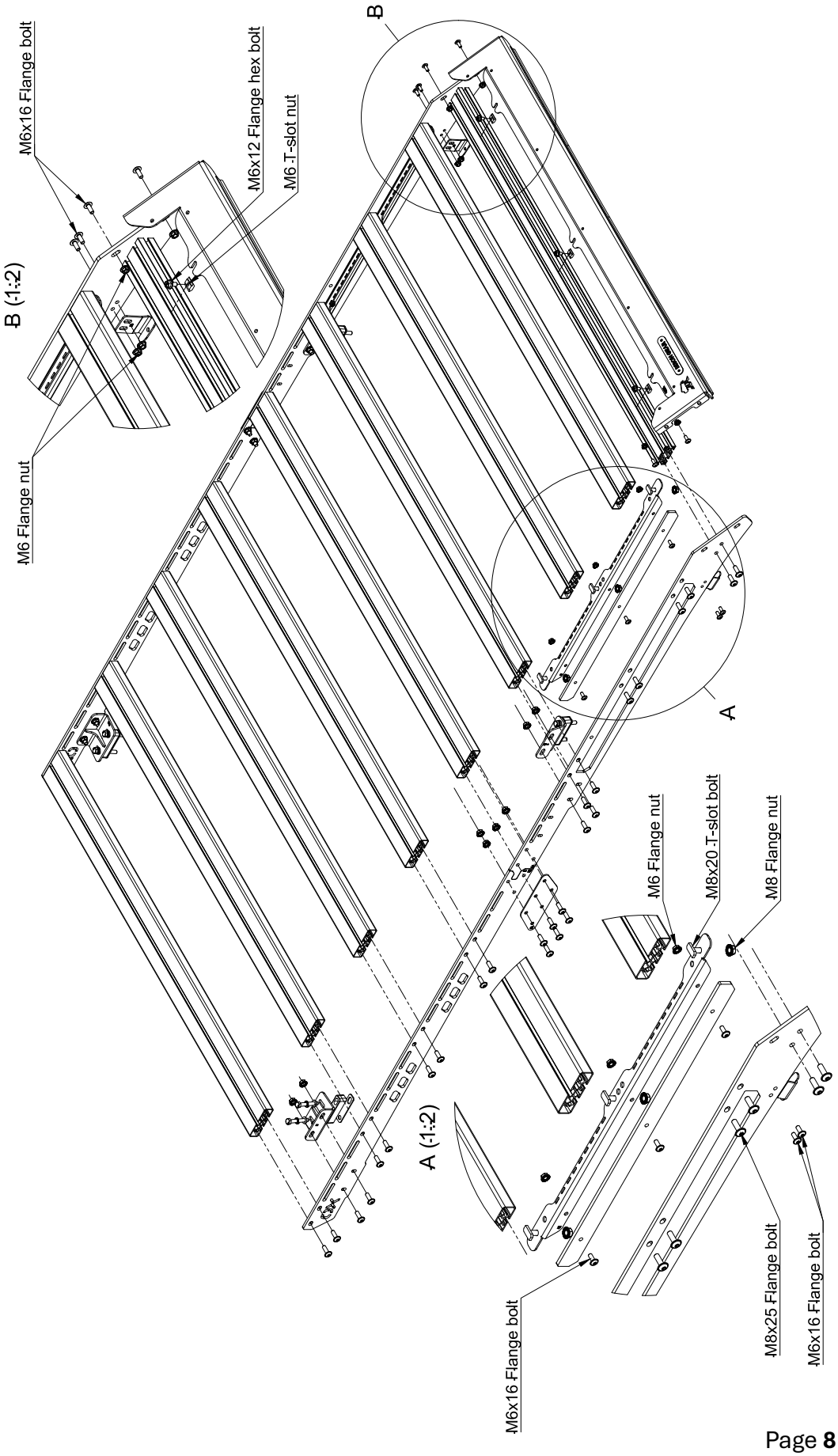
M6x16 Flange bolt
M6x12 Flange hex bolt
M6 T-slot nut
B
B (1:2)
M6 Flange nut
A
M6 Flange nut
M8x20 T-slot bolt
M8 Flange nut
A (1:2)
M6x16 Flange bolt
M8x25 Flange bolt
M6x16 Flange bolt

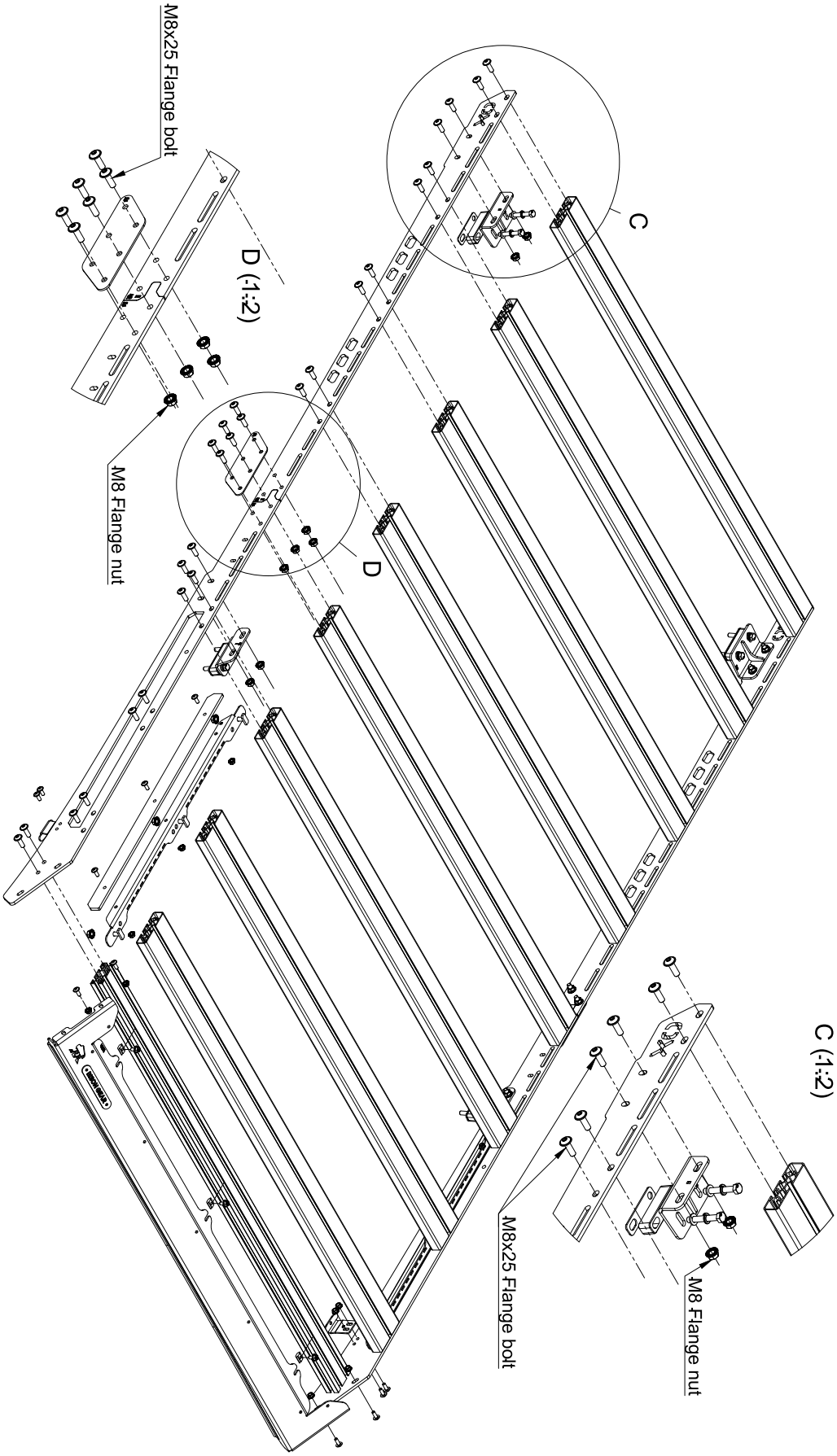
M8x25 Flange bolt
D (1:2)
M8 Flange nut
C
D
C (1:2)
M8x25 Flange bolt
M8 Flange nut

Installation:

Before you begin, review the Roof Rack Diagram on pages 8 and 9.

The exploded views illustrate how to assemble and mount the roof rack parts.

The Roof Rack is a 2-in-1 design – it can be used as a standard front wind deflector or include a LED bar cutout that allows installation of a 42” LED Bar lamp.

The base version includes the LED cutout, which can be easily converted to the standard version by attaching a specially designed cover. The choice is yours, and you can switch between the versions at any time.

The set also contains 2 additional T-slot M6 nuts and 2 M6×12 flange bolts for LED bar installation.

Follow the steps below to install product correctly:

1. Start by preparing the product parts and gathering the necessary tools.

2. Place (and trim if necessary) the rubber gasket on the wind deflector.

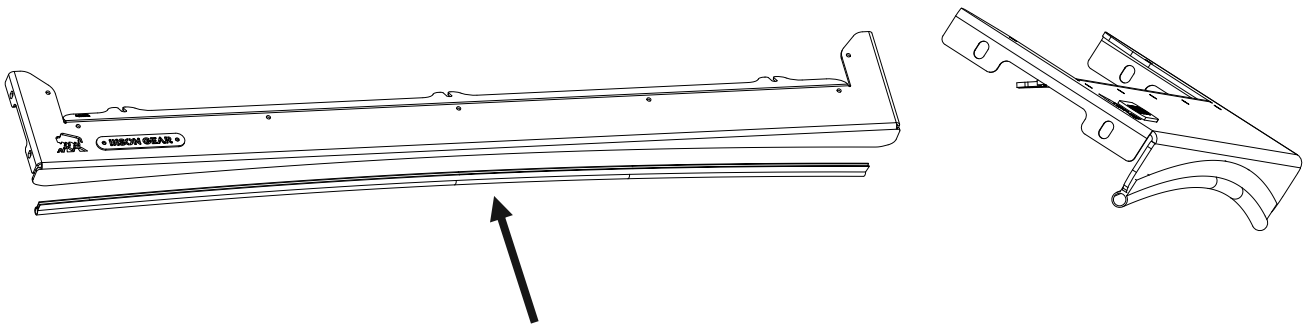

3. ***(That point refers only to the standard version)

   For the standard version, place the cover on the wind deflector. Insert the plastic clips into the holes, then press the pins down until they lock with the clips. If necessary, use a hammer to gently tap them into place.

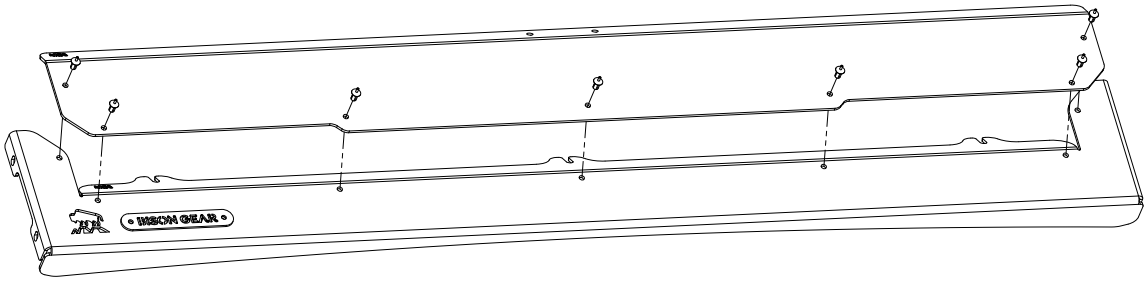

4. Assemble the side parts of the roof rack (**rails** and **connectors)** with the crossbars using **M8x25 flange bolts** as shown on **page 13**. At first, only pre-screw all the bolts. It is recommended to mount the roof rack upside down on a flat surface to ensure the top side is perfectly flat.

***Important

The Bison Gear crossbar features one T-slot on one side and two T-slots on the other. It is symmetrical, allowing it to be mounted on the roof rack in either direction. If you wish to change the orientation, simply unscrew the four bolts and switch sides.

The first and third 90x25 crossbars (counting from the front of the roof rack) need to be installed with the side featuring two T-slots facing down.

There is a difference between left and right rails, refer to the picture on page 12 to assemble them correctly.

BISON GEAR

Back Rail L

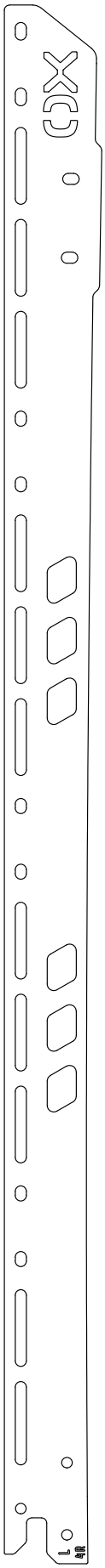

Back rail R

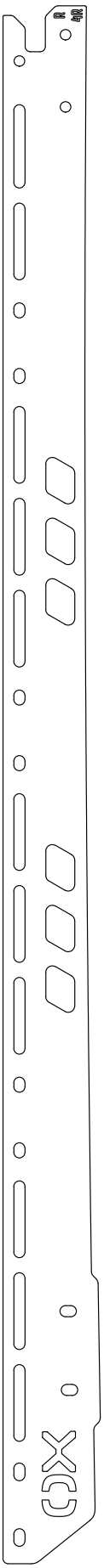

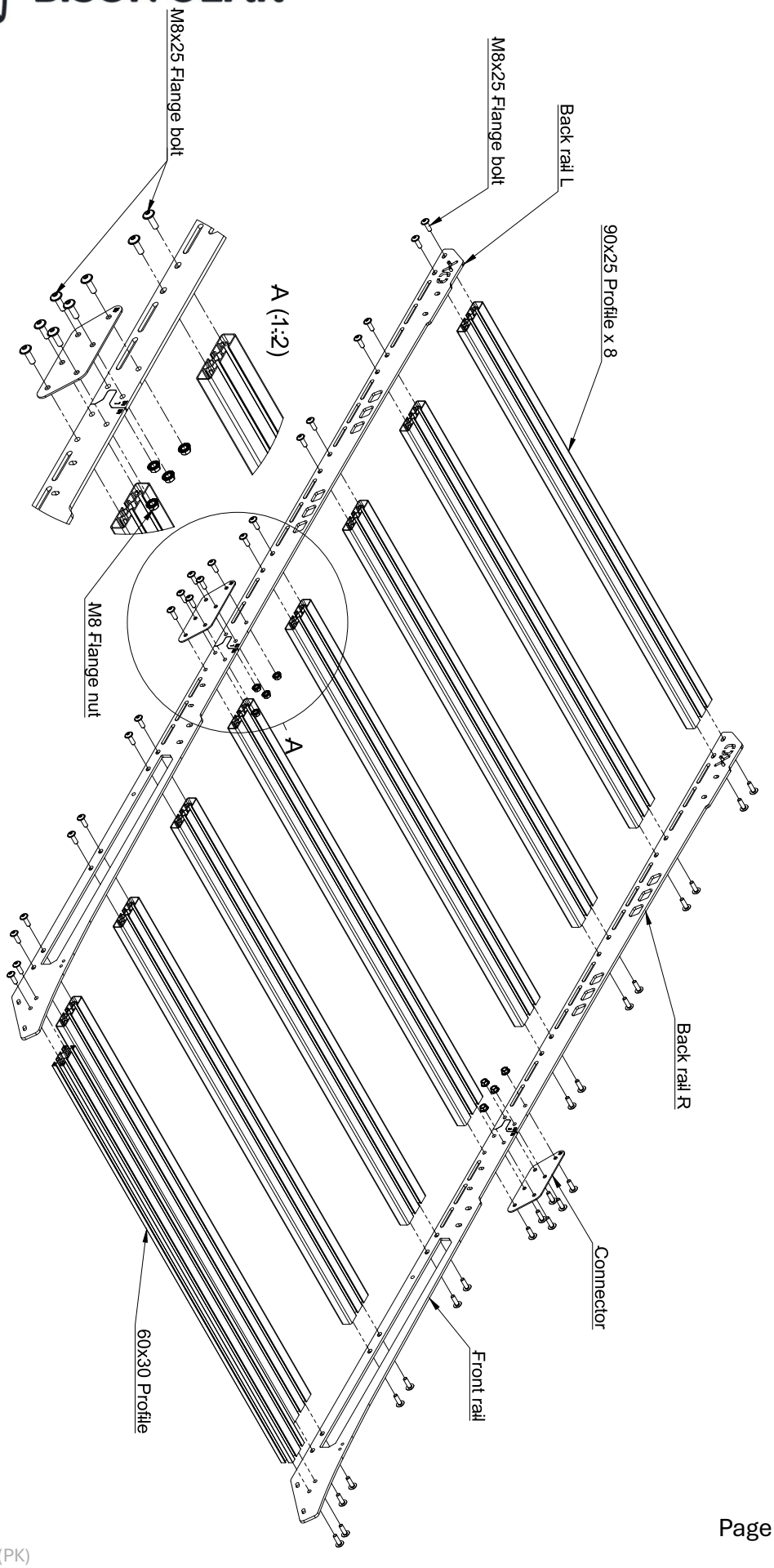
M8x25 Flange bolt
M8x25 Flange bolt
Back rail L
90x25 Profile x 8
A (1:2)
M8 Flange nut
A
Back rail R
Connector
Front rail
60x30 Profile

5. Tighten all the bolts. The profile bolt tightening torque is 8 Nm (6 ft-lb), others according to the torque settings diagram.

6. Using M8x25 Flange bolts and M8 Flange nuts attach the roof brackets to the rails. **Watch out as the front brackets have two versions – left and right. Do not screw them fully yet!**

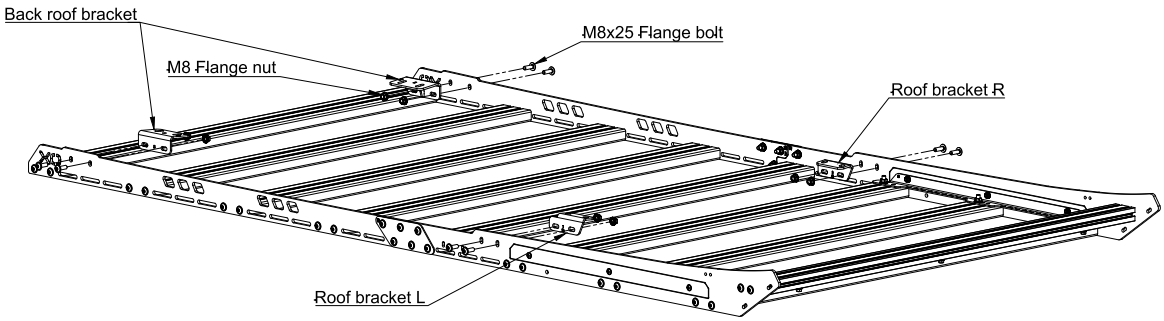

7. Slide the T-bolts into the first 3 90x25 crossbars (the crossbars have special oblong holes in each of the slots for the fasteners).
   • Place the support bracket and pre-screw it using **M8 flange nuts**.
   • Attach the railing gap cover to the support bracket using **M6x16 bolts** and **M6 nuts**.
   • Align the railing gap cover with the gaps in the front railings and tighten the **M8 nuts**.
   Repeat the steps on the other side.

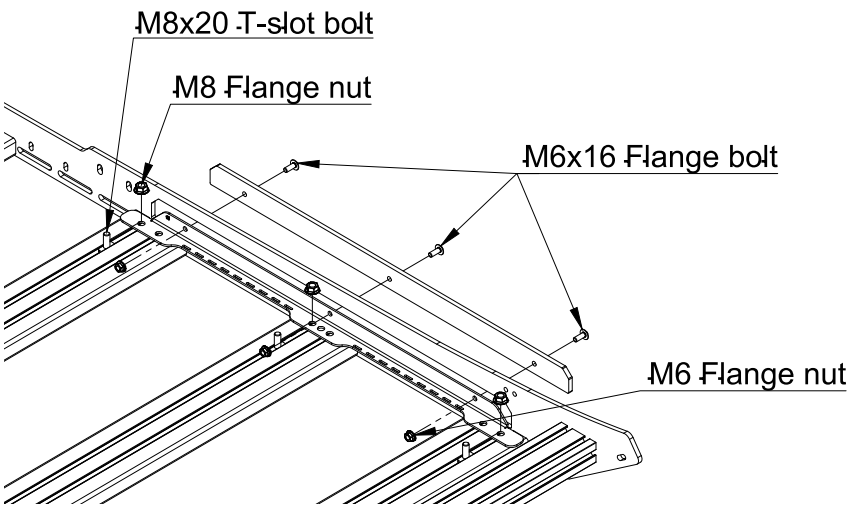

8. Turn the roof rack back.

9. Install the wind deflector:

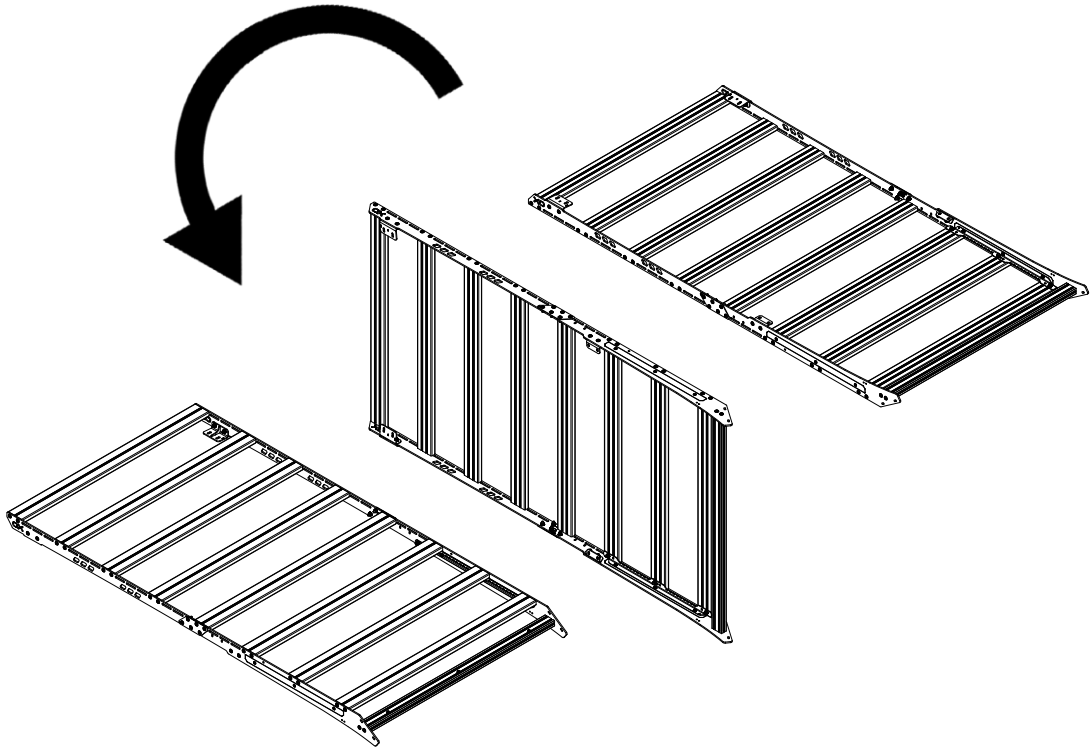

- Use 4 x **M6x16 bolts, M6 flange nuts** to screw it to the side rails.
- Use 3 x **T-slot M6 nuts and M6x12 flange hex bolts.** First, slide the T-slot nuts into the first slot of 30x60 crossbar.

(If installing the standard version of the roof rack, ensure that you complete the steps described in point 3 before attaching the wind deflector. The picture on **page 16** illustrates the LED bar version mount; the standard version will include an additional cover as described in point 3.)

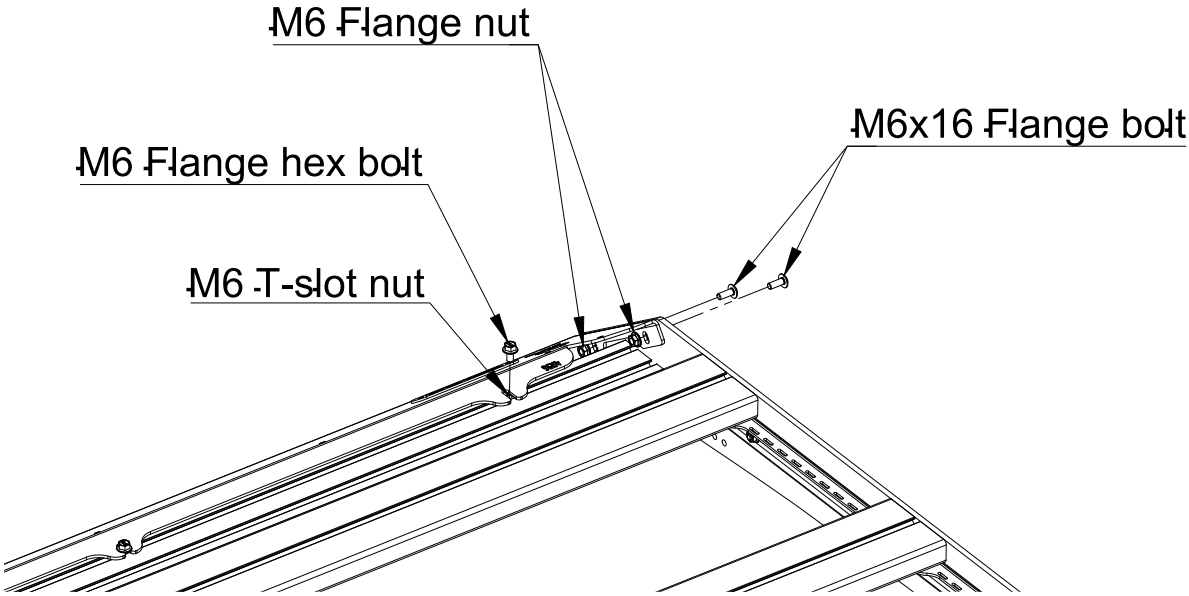

10. *** If there are any items on the roof, such as factory rails, a roof rack, or other accessories, remove them before starting the roof rack installation. Refer to the vehicle's owner's manual for guidance.

11. Before installing the roof rack on the car, prepare the following parts for the next step:

    - 8 - M8x55 hex bolts;
    - 8 – M8 flat washers;
    - 8 – M8 spring washers;
    - 4 – Roof spacers;
    - 4 – Rubber pads.

***** Important!**

In the next step you will need the assistance of at least one adult to help you lift the entire construction onto the roof.

12. Clean the area around the fixing points. Place **the rubber pads** and **spacers** on the roof, then position the roof rack in place.

13. Place the roof rack on the roof and pre-screw only the back bracket to the car (this helps set the position of the roof rack) using **M8x55 hex bolts, flat washers,** and **spring washers**.

***** Important!**

The set includes protective tape. We recommend gluing it where the rubber gasket of wind deflector and car's roof meets. This will prevent damage of paintwork at the point of contact.

14. (OPTIONAL) Mark the position for the protective tape. Lift the front of the rack and apply the tape beneath the wind deflector's rubber gasket.

15. Pre-screw the remaining bolts to the brackets.

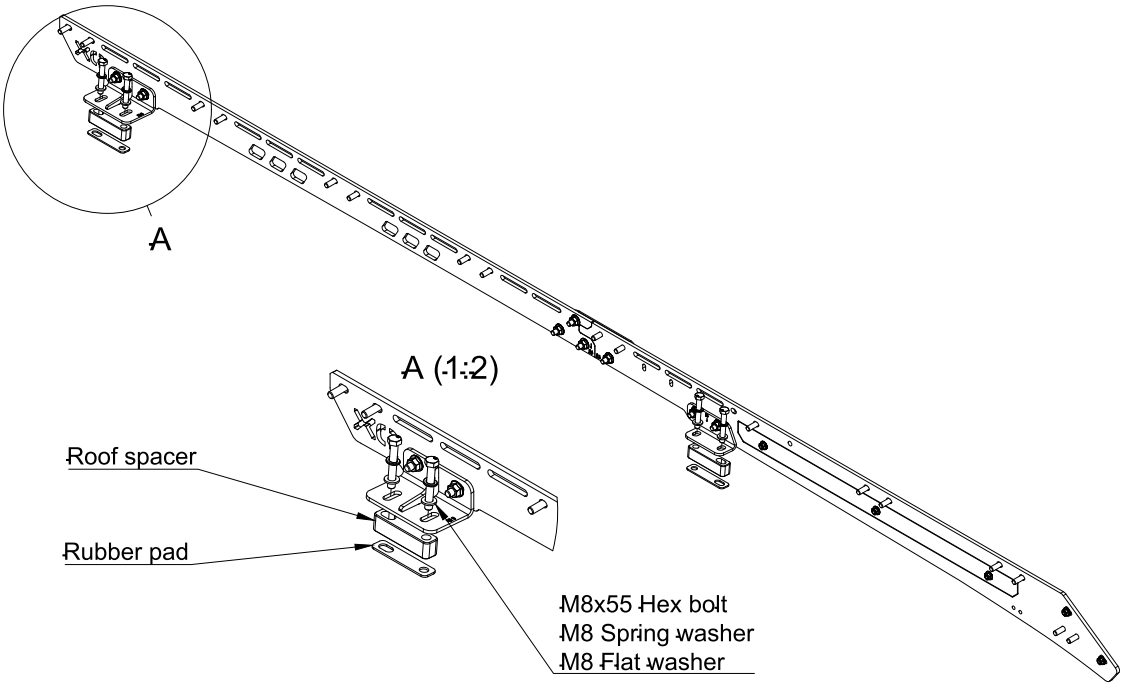

16. Adjust the position of the roof rack so that it is centered on the car.

17. Tighten all the bolts.
    - Tightening torque M8x55 bolts - 15 Nm /11 ft-lbs.
      (roof rack -> roof connection)
    - Tightening torque M8x25 flange bolts/ M8 flange nut - 25 Nm /18.5 ft-lbs
      (roof brackets -> side rails connection)

The last part to screw to the roof rack is a front support bracket. You can do it in two ways – 19.A, 19.B (both are correct)

19.A Remove the rubber cover directly under where the front support will be installed. Clean the area where the front support meets the car. Peel off the protective tape from the front support. Attach the front support to the car and secure it to the roof rack using an **M8x25 bolt** and **M8 nuts**.

19.B Clean the area of the rubber cover where the front support will make contact. Remove the protective tape from the front support. Attach the front support to the rubber cover, press it down firmly, and secure it to the roof rack using an **M8x25 bolt** and **M8 nuts**.

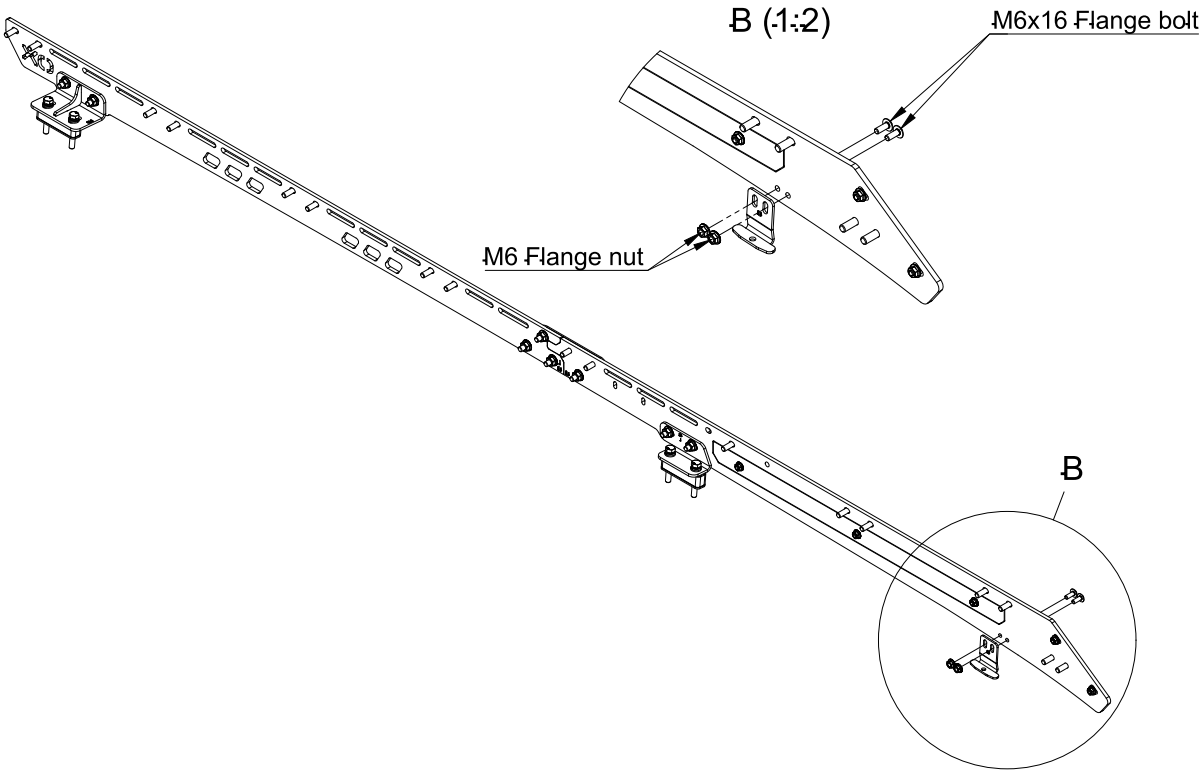

20. Tighten the bolts and nuts on the front support.
    Tightening torque: 25 Nm (18.5 ft-lbs).

Ensure that everything is mounted correctly and all bolts are tightened. If everything is in place, your installation is complete.

After driving 50 km with the rack on the roof, check all the bolts and retighten them if necessary.

Have a great time with Bison Gear product!

Email: contact@bison-gear.com

Phone: **+48 505 642 981**